Tables

Atlas Console

Console
166W x 39D x 76H cm

Designer: Ini Archibong
Collection IV

Also available with marble top, lacquered nodes and legs.

Legs available in a lacquered finish (any Sé or RAL K7 Classic Colour)

Please contact us to find out more about all the colour options available.

Above product:
Console lacquered in Sé Chic Red with Carrara Marble nodes.

RAL CLASSIC

www.se-collections.com

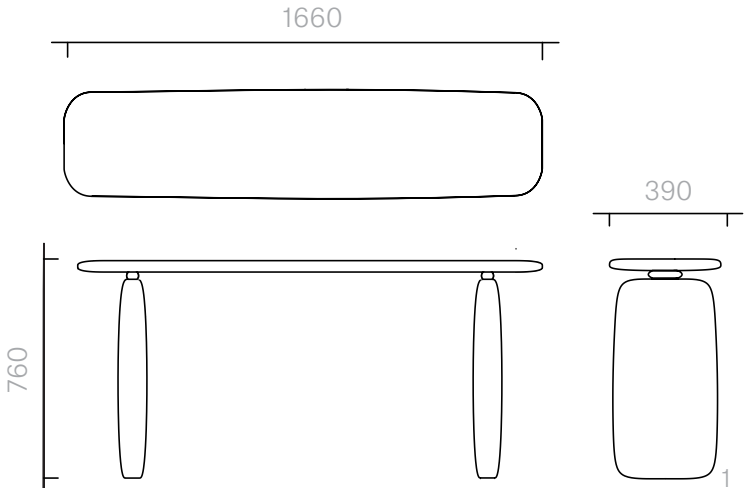

Finishes
Sé Lacquers

Sé Classic

Classic Black

Classic Blue

Classic Red

Classic White

Sé Chic

Sé Chic Red

Chic Taupe

Chic Beige

Chic Grey

Chic Light Grey

Chic Green

Chic Pink

Chic Blue

Lacquered pieces are also available in any RAL K7 or NCS colour upon request. Please contact us for more information.

Disclaimer:
For technical reasons connected with colour reproduction and media limitations the colours shown may not be an exact representation of the actual product. Please contact us for further information.

www.se-collections.com